R4 September 2022

STRUCTURAL DESIGN CRITERIA

BUILDING CODE	2018 IBC
DESIGN DEAD LOAD	ACTUAL WEIGHT OF STRUCTURE
ROOF LIVE LOAD	20 PSF

ROOF SNOW LOAD

1. GROUND SNOW LOAD	$P_g := 5$ PSF
2. SNOW EXPOSURE FACTOR	1.0
3. SNOW LOAD IMPORTANCE FACTOR	1.0
4. THERMAL FACTOR	1.2
5. FLAT ROOF SNOW LOAD	$P_f := 9.2$ PSF

WIND DESIGN DATA

1. BASIC WIND SPEED	109 MPH (3 SECOND GUST)
2. WIND IMPORTANCE FACTOR	N/A
3. RISK CATEGORY	II
4. WIND EXPOSURE CATEGORY	C

EARTHQUAKE DESIGN DATA

1. SEISMIC IMPORTANCE FACTOR	I = 1.0
2. MAPPED SPECTRAL RESPONSE ACCELERATIONS	$S_S := 0.228$ $S_1 := 0.083$
3. SITE CLASS	D
4. SPECTRAL RESPONSE COEFFICIENTS	$S_{DS} := 0.243$ $S_{D1} := 0.133$
5. SEISMIC DESIGN CATEGORY	C
6. BASIC SEISMIC FORCE SYSTEM	CANTILEVERED COLUMNS
7. DESIGN BASE SHEAR	V = 4,000 LBS
8. SEISMIC RESPONSE COEFFICIENT	$C_S := 0.195$
9. RESPONSE MODIFICATION FACTOR	R:= 1.25
10. ANALYSIS PROCEDURE	EQUIVALENT LATERAL FORCE

FOUNDATION DESIGN DATA

1. ALLOWABLE BEARING PRESSURE	2500 PSF
2. LATERAL BEARING PRESSURE	166 PSF/FT
3. GEOTECHNICAL REPORT PREPARER	UES
4. GEOTECHNICAL REPORT NUMBER	A23104.01808.000
5. GEOTECHNICAL REPORT DATE	JUNE 13, 2023

MATERIAL SPECIFICATIONS

1. STRUCTURAL STEEL WIDE FLANGE	ASTM A992
2. STRUCTURAL STEEL PLATES	ASTM A36 (U.N.O)
3. CHANNELS LESS THAN 6" DEEP	ASTM A36
ALL OTHER CHANNELS	ASTM A572, GR. 50
4. ANGLES LESS THAN L3x3x1/4	ASTM A36
ALL OTHER ANGLES	ASTM A572, GR. 50
5. HOLLOW STRUCTURAL SECTIONS	ASTM A500, GR. C
6. 3" METAL DECK	ASTM A653, GR. 50
7. WELDING ELECTRODE STRENGTH	E-70XX
8. ANCHOR BOLTS	ASTM F1554, GR. 36
9. STRUCTURAL BOLTS	ASTM A307 GR. A (U.N.O)
10. STRUCTURAL NUTS	ASTM A563A, HEAVY HEX (U.N.O)
11. STRUCTURAL WASHERS	ASTM F436 (U.N.O)
12. 28 DAY CONCRETE COMP. STRENGTH	f'c = 4000 PSI
13. CONCRETE REINFORCING STEEL	ASTM A706, GR. 60 DEF. BARS

U.N.O. - UNLESS NOTED OTHERWISE (REFER TO DRAWINGS)

ABREVIATIONS

A.F.F.	ABOVE FINISH FLOOR	N.B.M	NOT BY MADISON
@	AT	N.S.	NEAR SIDE
℄	BUILDING LINE	NEO	NEOPRENE
℄	CENTER LINE	O/C	ON CENTER
C/C	CENTER TO CENTER	O/O	OUT TO OUT
CLR	CLEAR	ℙ	PLATE
DIA.	DIAMETER	SQ.	SQUARE
EA.	EACH	T.O.I.	TOP OF ISLAND
ELEV.	ELEVATION	TYP.	TYPICAL
F.S.	FAR SIDE	UG	UNDERGROUND
FTG.	FOOTING	V	VENT
G.C.	GENERAL CONTRACTOR	W.A.	WHITE ACRYLIC
GA.	GAUGE		
GALV.	GALVANIZED		
HX.HD.	HEX HEAD SCREW		

GENERAL NOTES

1. STRUCTURAL WELDED JOINTS SHALL CONFORM TO THE PROVISIONS OF AWS D1.1-04, STRUCTURAL WELDING CODE-STEEL, PUBLISHED BY THE AMERICAN WELDING SOCIETY.
2. ANY FIELD WELDING SHALL REQUIRE SPECIAL INSPECTION. WELDER CERTIFICATION SHALL BE AVAILABLE AT THE JOBSITE DURING TIMES OF INSPECTION.
3. ALL STRUCTURAL BOLTED CONNECTIONS SHALL BE ASTM GRADE A-307 BOLTS AS NOTED ON DRAWINGS AND SHALL BE MADE "SNUG-TIGHT" ONLY AS DEFINED BY ANSI/AISC 360-05. SPECIAL INSPECTIONS ARE NOT REQUIRED FOR THESE CONDITIONS. WASHERS ARE NOT REQUIRED UNLESS HOLES ARE OVERSIZED OR SLOTTED.

FILE NAME: WGA09902-2 Permits.dwg

RACEWAY #1663

29'-0" X 61'-0"

(6) COLUMN EDO CANOPY

500 MERIWETHER ROAD NW

MILLEDGEVILLE, GA 31061

MADISON SCOPE OF WORK

FURNISH AND INSTALL ONE (1) 29'-0" X 61'-0" (6) COLUMN RACETRAC EDO CANOPY, TO INCLUDE:

DESIGN:
1. CANOPY SHALL BE DESIGNED FOR A 18'-0" CLEAR HEIGHT.
2. MADISON SHALL BE RESPONSIBLE FOR DESIGN OF CANOPY FOOTINGS AND CANOPY STRUCTURE.
3. CONTRACTOR TO FURNISH REQUIRED SOILS REPORT, GRADING PLAN, AND OTHER PERTINENT INFORMATION.
4. MADISON TO FURNISH ONE (1) PDF SET OF PRELIMINARY DRAWINGS FOR CUSTOMER REVIEW AND COMMENT.
5. MADISON TO FURNISH SIGNED AND SEALED SETS OF DRAWINGS AND SUPPORTING CALCULATIONS AS NEEDED FOR PERMIT SUBMITTAL.
6. MADISON SHALL MAKE ANY APPLICABLE PLAN CHECK CORRECTIONS AND PRODUCE REVISED DRAWINGS AND CALCULATIONS FOR SUBMITTAL.
7. CONTRACTOR SHALL BE RESPONSIBLE FOR DRAWING SUBMITTAL TO THE LOCAL JURISDICTION AND ALL APPLICABLE FEES.

MATERIALS:
1. MADISON TO FURNISH ANCHOR BOLTS AND ACM TEMPLATES FOR CONTRACTOR INSTALLATION.
2. ALL STRUCTURAL STEEL WILL BE FURNISHED WITH ONE (1) COAT OF SHOP APPLIED GREY PRIMER.
3. DECKING SHALL BE PRE-FINISHED BRONZE WITH AN EMBOSSED FINISH. DECK RIBS SHALL BE 3" TALL AND 16" O/C.
4. GUTTER SHALL BE 20GA PRE-FINISHED BRONZE WITH AN EMBOSSED FINISH.
5. SCUPPERS WITH OVERFLOWS FOR WATER DRAINAGE.
6. FASCIA BRACKETS AND REQUIRED FLASHING SHALL BE GALVANIZED.
7. FASCIA PANELS SHALL BE 4'-0" TALL 4mm DURAGLOSS REGIONS GREEN ACM.
8. SIX (6) 1 1/2"ø ELECTRICAL CONDUITS IN CUSTOMER DESIGNATED COLUMNS SHALL BE RIGID GALVANIZED PIPE WITH SEAL-OFFS AND ACCESS PLATES LOCATED AT 48" ABOVE FINISHED GRADE.
9. MADISON TO FURNISH ALL FASTENERS AND SEALANT ASSOCIATED WITH ITS SCOPE OF WORK.
10. ALL FIELD APPLIED FINISH COATINGS SHALL BE THE RESPONSIBILITY OF THE CONTRACTOR.

SITE READINESS:
1. JOBSITE MUST BE CLEAR OF ANY CONSTRUCTION DEBRIS, TRENCHING, OR OTHER OBSTACLES PREVENTING ACCESS TO THE CANOPY AREA. IF CONDITIONS OR SCHEDULE REQUIRE SPECIALIZED EQUIPMENT OR ADDITIONAL LABOR HOURS TO WORK AROUND INADEQUATE CONDITIONS, COST INCURRED WILL BE BILLED TO THE CONTRACTOR AT COST +15%.
2. FOUNDATIONS AND ANCHOR BOLTS MUST BE SET IN ACCORDANCE WITH MADISON PRODUCED APPROVED FOUNDATION PLAN THAT IS DELIVERED WITH THE ANCHOR BOLTS.
3. CONTRACTOR SHALL PROVIDE NECESSARY SPACE FOR UNLOADING OF MATERIALS, AND COMMUNICATE ANY SPACE LIMITATIONS PRIOR TO DELIVERY.
4. CONTRACTOR SHALL PROVIDE PROGRESS PHOTOS AS EVIDENCE OF SITE READINESS PRIOR TO EACH MADISON MOBILIZATION.

INSTALLATION:
1. CONTRACTOR TO INSTALL MADISON FURNISHED ANCHOR BOLTS, UTILIZING TEMPLATES AND DRAWINGS PROVIDED. MADISON MUST BE NOTIFIED AT LEAST TWO (2) WEEKS IN ADVANCE PRIOR TO NEEDING THE ANCHOR BOLTS.
2. MADISON TO UNLOAD AND STAGE MATERIALS AS NEEDED.
3. MADISON TO SET AND ANCHOR STRUCTURAL STEEL COLUMNS AND ROOF FRAMING.
4. MADISON TO INSTALL ROOF DECK, OUTRIGGERS, PERIMETER SOFFIT/GUTTER, FASCIA, FLASHING AND TRIMS AS REQUIRED.
5. MADISON TO CUT HOLES AND MOUNT CUSTOMER FURNISHED LED LIGHT FIXTURES PER PLAN.
6. CONTRACTOR TO FURNISH REQUIRED LABOR AND MATERIALS TO WIRE LIGHT FIXTURES.
7. MADISON TO DISPOSE OF RELATED CONSTRUCTION DEBRIS IN CONTRACTOR FURNISHED DUMPSTER.

EXCLUSIONS:
1. PERMITS, PERMIT SUBMITTAL, LICENSE FEES.
2. SPECIAL INSPECTIONS.
3. UNION/PREVAILING WAGE REQUIREMENTS.
4. BUY AMERICAN ACT OR ANY OTHER RESTRICTIVE PURCHASING AGREEMENTS.
5. FINISH PAINT, FINISH COATINGS.
6. ELECTRICAL WORK/MATERIALS.
7. CONCRETE WORK/MATERIALS.
8. PACKING GROUT BETWEEN BEARING SURFACES AND BASE PLATES.
9. GALVANIZING OF STRUCTURAL STEEL.
10. PROCUREMENT OF CANOPY DOWN LIGHTING.
11. PROCUREMENT AND INSTALLATION OF CANOPY SIGNAGE INCLUDING ALL ELECTRICAL MATERIALS AND LABOR AS REQUIRED.
12. ILLUMINATED SIGNAGE, NEON AND LED.
13. FASCIA DECALS OTHER THAN THOSE LISTED IN THE ABOVE SCOPE OF WORK.
14. COLUMN SHROUDS (BRICK OR OTHER).
15. ANY ITEMS NOT SPECIFICALLY IDENTIFIED IN THIS EXHIBIT.
16. ANY ITEMS SPECIFIED AS BEING PERFORMED BY OTHERS OR BY CONTRACTOR IN THIS EXHIBIT.

SCHEDULE OF DRAWINGS

SHEET NUMBER	DRAWING TITLE	RELEASE DATE
CS-1	COVER SHEET	
F-1	FOUNDATION PLAN AND DETAILS	
A-1	FRAMING PLAN AND LIGHTING PLAN	
A-2	ELEVATIONS	
A-3	SECTIONS AND DETAILS	

SCHEDULE OF REVISIONS

REVISION NUMBER	DESCRIPTION	SHEETS

REV.	DATE	DESCRIPTION	BY
1			

PROJECT: RACEWAY #1663
29'-0" X 61'-0"
(6) COLUMN EDO CANOPY
COVER PAGE

LOCATION: 500 MERIWETHER ROAD NW
MILLEDGEVILLE, GA 31061

MADISON INDUSTRIES
MADISONIND.COM

CORPORATE OFFICE
2901 Walnut Ave.
Suite 211
Santa Ana, CA 92704
562.484.5099

CALIFORNIA
1730 Dupont Avenue
Hesperia, CA 92345
562.484.5099

GEORGIA
1555 Dogwood Drive
Conyers, GA 30094
770.483.4401

THESE DRAWINGS AND ALL INFORMATION HEREON ARE OF A CONFIDENTIAL NATURE AND REMAIN THE PROPERTY OF MADISON INDUSTRIES (MI). ANY USE OR REPRODUCTION OF THESE DRAWINGS FOR ANY PURPOSE, EXCEPT BY WRITTEN PERMISSION OF MADISON INDUSTRIES IS STRICTLY PROHIBITED.

GEORGIA REGISTERED No. PE036829 PROFESSIONAL ENGINEER JOHN A. BRADLEY
5/22/24

PROFESSIONAL ENGINEER

MODEL No.

SCALE: AS NOTED

DRAWN BY	DATE
MH	5/16/24
CHECKED BY	DATE
DD	5/16/24
MI ENGINEER	DATE
JFB	5/15/24

DRWG. No. CS-1

SHEET 1 OF 5

JOB No. WGA09902-2

R4 September 2022

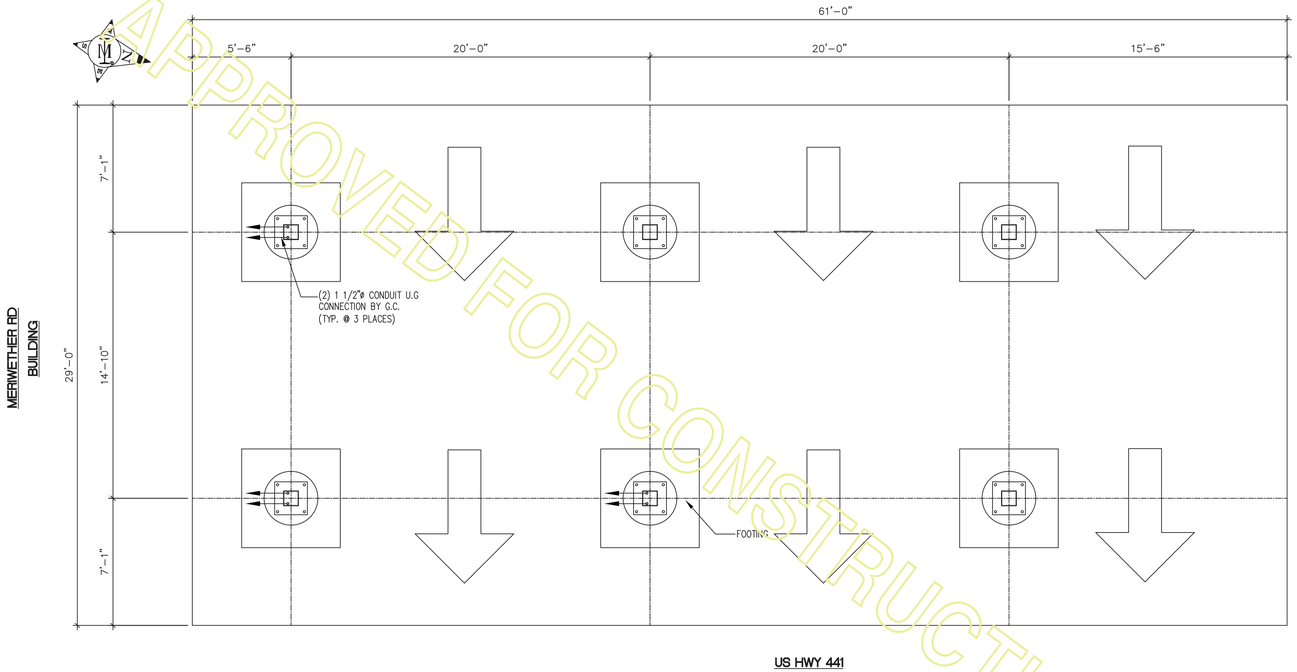

FOUNDATION PLAN
SCALE: 1/4" = 1'-0"

NOTES:

1. ALLOWABLE SOIL BEARING CAPACITY = 2500 P.S.F.
LATERAL SOIL PRESSURE = 166 P.S.F. PER FOOT OF DEPTH
CONCRETE = 4000 P.S.I. AT 28 DAYS
REINFORCING = DEFORMED BILLET PER A.S.T.M. A706 GRADE 60

2. IT SHALL BE THE RESPONSIBILITY OF THE GENERAL CONTRACTOR TO PROVIDE REQUIRED LOAD TESTS OR OTHER ADEQUATE PROOF AS TO THE PERMISSIBLE SAFE BEARING CAPACITY OF THE SOIL.

3. IT SHALL BE THE RESPONSIBILITY OF THE GENERAL CONTRACTOR TO ACCURATELY POUR ALL FOUNDATION TO THE PROPER ELEVATIONS AS SHOWN ON THE APPROVED FOUNDATION PLAN AND SET ALL ANCHOR BOLTS AND/OR LEVELING PLATES TO PROPER DIMENSIONS AND ELEVATIONS.

GRADE INFO
HP SLAB = 425.40'
LP SLAB = 424.67'
TOP OF FTGS. = 422.67'

GRADES PER CUSTOMER GRADING PLAN, DRAWING C4.0 DATED 4/10/2024

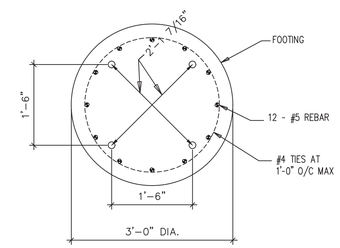

SECTION B-B
SCALE: 3/4" = 1'-0"

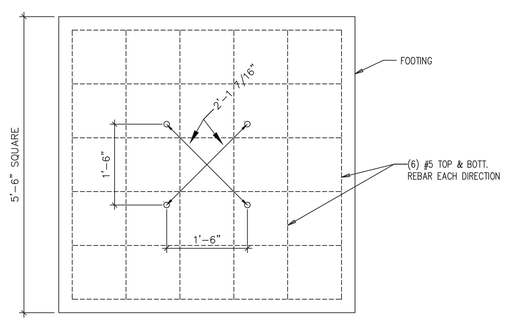

SECTION A-A
SCALE: 3/4" = 1'-0"

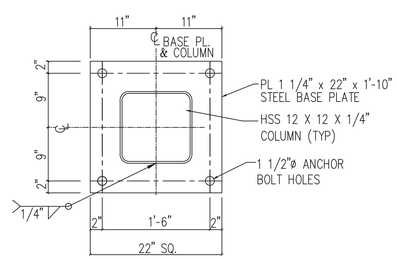

BASE PLATE DETAIL
SCALE: 1" = 1'-0"

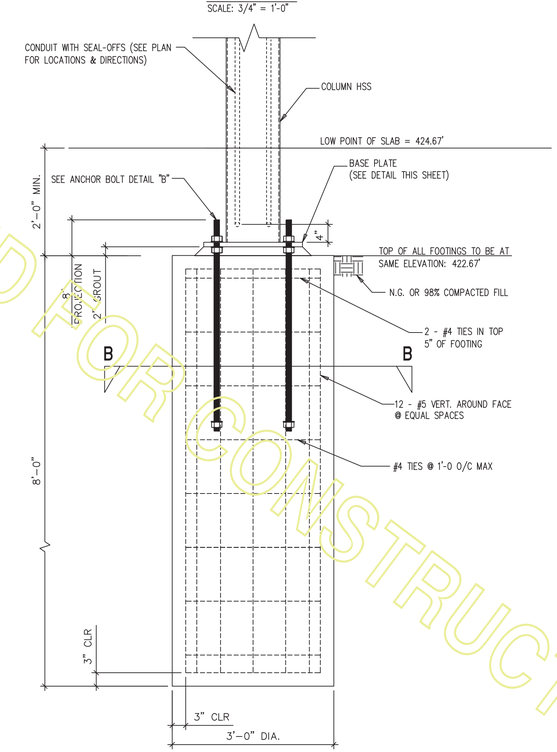

ROUND PIER FOOTING DETAIL - OPTIONAL
SCALE: 3/4" = 1'-0"

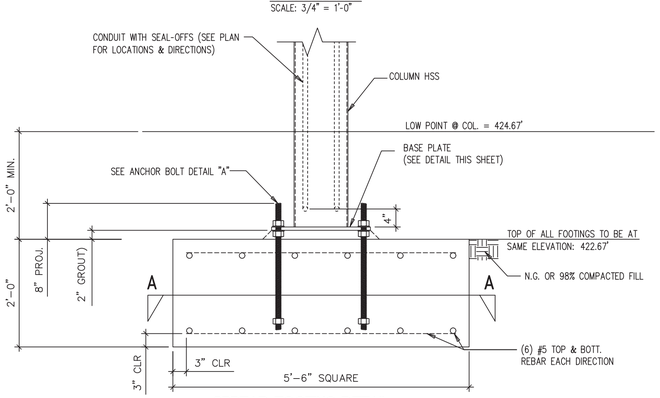

SPREAD FOOTING DETAIL
SCALE: 3/4" = 1'-0"

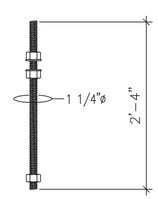

ASTM F1554 GR. 36 (Fy = 36 ksi) ANCHOR BOLTS, WASHERS, & NUTS FURNISHED BY MADISON, INSTALLED BY G.C.

ANCHOR BOLT DETAIL "A"
SCALE: 1" = 1'-0"

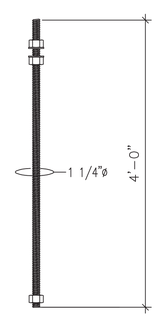

ASTM F1554 GR. 36 (Fy = 36 ksi) ANCHOR BOLTS, WASHERS, & NUTS FURNISHED BY MADISON, INSTALLED BY G.C.

ANCHOR BOLT DETAIL "B"
SCALE: 1" = 1'-0"

DO NOT USE FOR CONSTRUCTION OF FOUNDATION UNLESS APPROVED BY MADISON INDUSTRIES REPRESENTATIVE IN SPACE BELOW.

APPROVED FOR
CONSTRUCTION
BY: Matt Pleason
DATE: 5/16/2024

IT SHALL BE THE RESPONSIBILITY OF THE GENERAL CONTRACTOR TO ACCURATELY POUR ALL FOUNDATIONS TO ELEVATIONS GIVEN AND SET ANCHOR BOLTS AT DIMENSIONS SHOWN ON FOUNDATION DRAWINGS.

APPROVED FOR CONSTRUCTION

REV.	DATE	DESCRIPTION	BY
1			

PROJECT: RACEWAY #1663
29'-0" X 61'-0"
(6) COLUMN EDO CANOPY
FOUNDATION PLAN AND DETAILS

LOCATION: 500 MERIWETHER ROAD NW
MILLEDGEVILLE, GA 31061

MADISON INDUSTRIES
MADISONIND.COM
CORPORATE OFFICE
2600 W. Walnut Blvd.
Suite 211
Santa Ana, CA 92704
562.494.5099
CALIFORNIA
17201 Downey Avenue
Hesperia, CA 92345
562.494.5099
GEORGIA
1955 Thornton
Conyers, GA 30094
770.483.4401

THESE DRAWINGS AND ALL INFORMATION HEREON ARE OF A CONFIDENTIAL NATURE AND REMAIN THE PROPERTY OF MADISON INDUSTRIES (MI). ANY USE OR REPRODUCTION OF THESE DRAWINGS FOR ANY PURPOSE, EXCEPT BY WRITTEN PERMISSION OF MADISON INDUSTRIES IS STRICTLY PROHIBITED.

GEORGIA REGISTERED No. PE036520 PROFESSIONAL ENGINEER JOHN F. BRADLEY
5/22/24

PROFESSIONAL ENGINEER

MODEL No.

SCALE

DRAWN BY	DATE
MH	5/16/24
CHECKED BY	DATE
DD	5/16/24
MI ENGINEER	DATE
JFB	5/15/24

DRWG. No. F-1

SHEET 2 OF 5

JOB No. WGA09902-2

FILE NAME: WGA09902-2 Permits.dwg

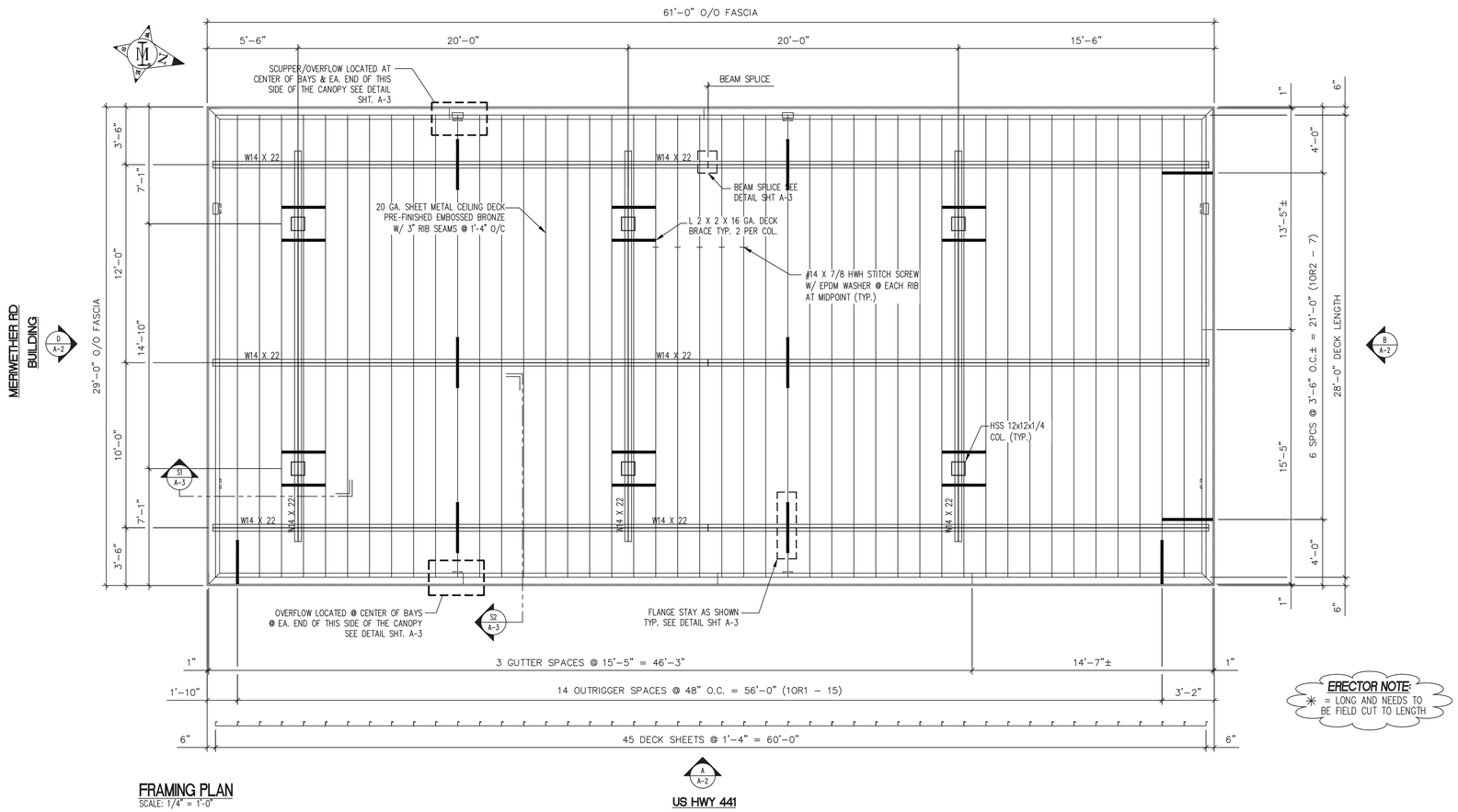

ERECTOR NOTE:
✳ = LONG AND NEEDS TO BE FIELD CUT TO LENGTH

FRAMING PLAN
SCALE: 1/4" = 1'-0"

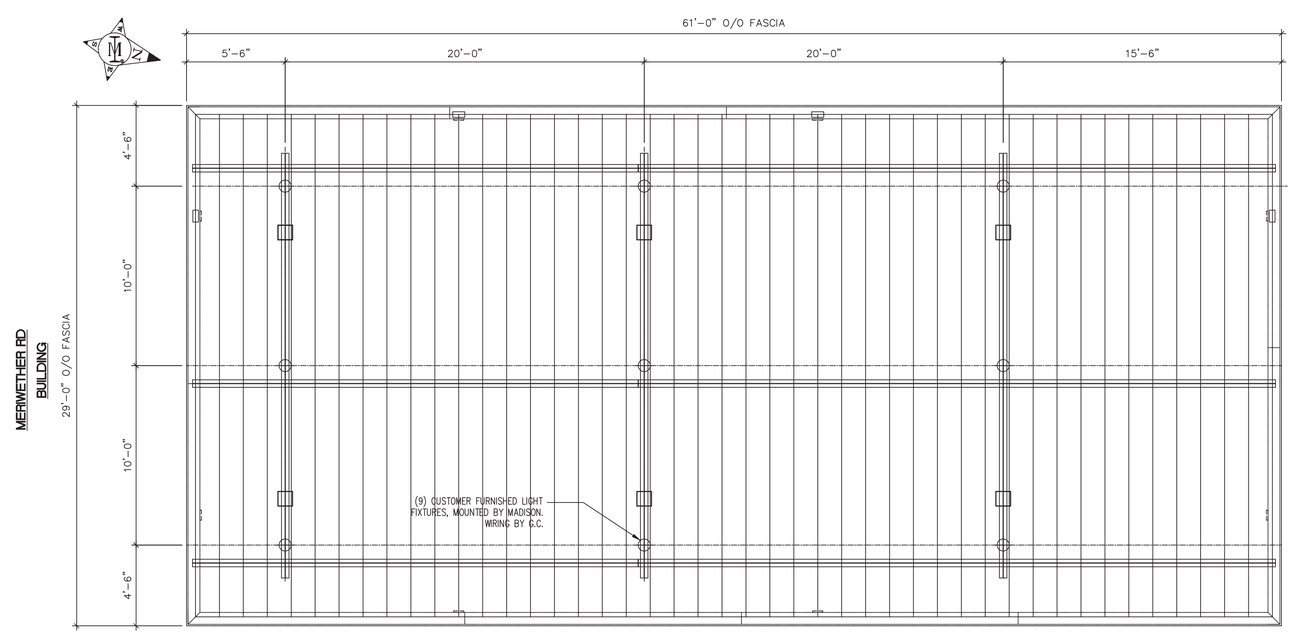

LIGHTING PLAN
SCALE: 1/4" = 1'-0"

R4 September 2022

FILE NAME: WGA09902-2 Permits.dwg

REV.	DATE	DESCRIPTION	BY
1			

PROJECT
RACEWAY #1663
29'-0" X 61'-0"
(6) COLUMN EDO CANOPY
FRAMING PLAN AND LIGHTING PLAN

LOCATION
500 MERIWETHER ROAD NW
MILLEDGEVILLE, GA 31061

MADISON INDUSTRIES
MADISONIND.COM

CORPORATE OFFICE
2850 W. Walnut Blvd.
Suite 211
Santa Ana, CA 92704
562.484.5099

CALIFORNIA
17201 Downey Avenue
Hesperia, CA 92345
562.484.5099

GEORGIA
1055 Industrial Blvd.
Conyers, GA 30094
770.483.4401

THESE DRAWINGS AND ALL INFORMATION HEREON ARE OF A CONFIDENTIAL NATURE AND REMAIN THE PROPERTY OF MADISON INDUSTRIES (MI). ANY USE OR REPRODUCTION OF THESE DRAWINGS FOR ANY PURPOSE, EXCEPT BY WRITTEN PERMISSION OF MADISON INDUSTRIES IS STRICTLY PROHIBITED.

GEORGIA REGISTERED No. PE036620 PROFESSIONAL ENGINEER JOHN F. BRADLEY
5/22/24

PROFESSIONAL ENGINEER

MODEL No.

SCALE: AS NOTED

DRAWN BY	DATE
MH	5/16/24
CHECKED BY	DATE
DD	5/16/24
MI ENGINEER	DATE
JFB	5/15/24

DRWG. No. A-1

SHEET 3 OF 5

JOB No. WGA09902-2

R4 September 2022

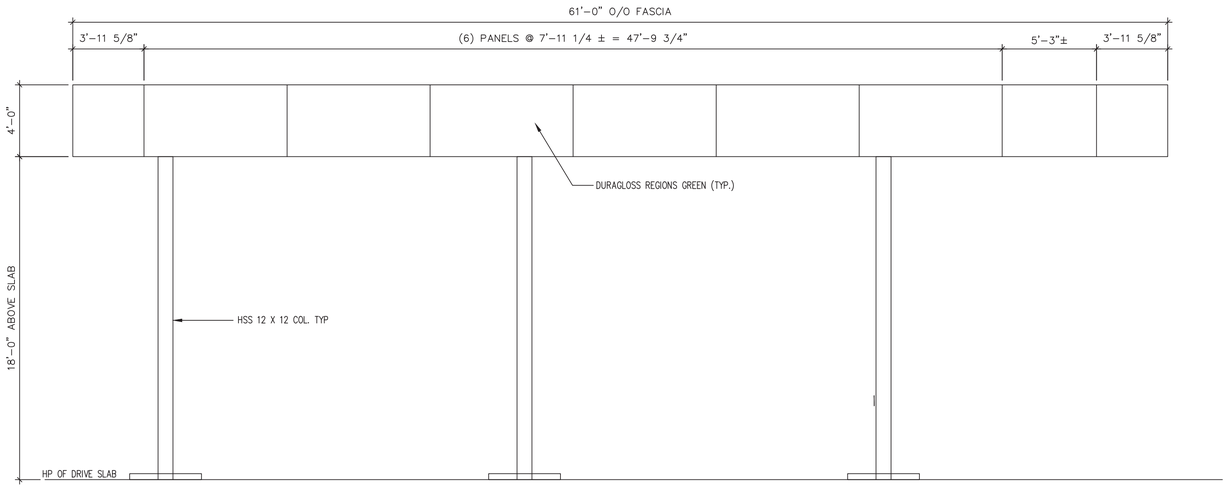

ELEVATION (A / A-1)
SCALE: 1/4" = 1'-0"

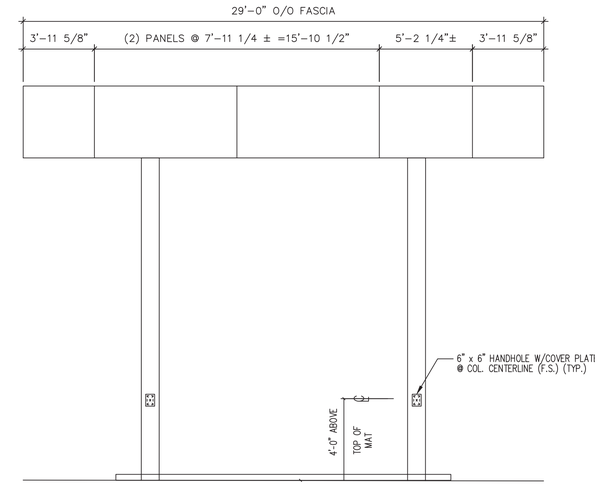

ELEVATION (B / A-1)
SCALE: 1/4" = 1'-0"

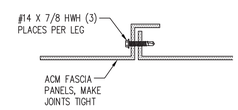

TYP. FASCIA JOINT DETAIL

ERECTOR NOTE:
✳ = LONG AND NEEDS TO BE FIELD CUT TO LENGTH

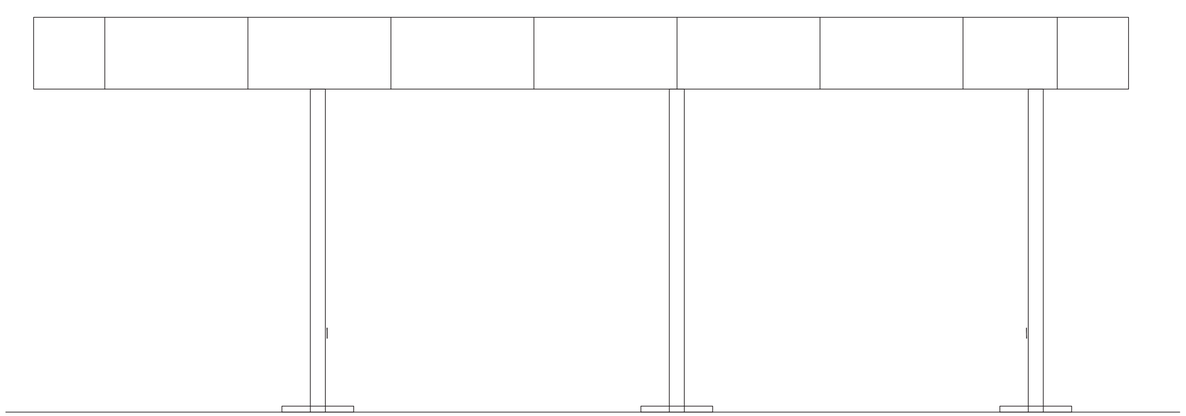

ELEVATION (C / A-1)
SCALE: 1/4" = 1'-0"

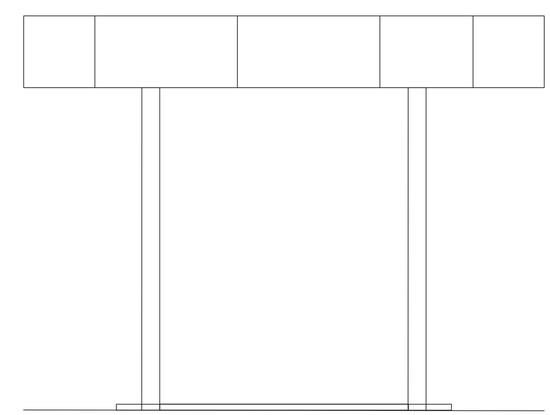

ELEVATION (D / A-1)
SCALE: 1/4" = 1'-0"

REV.	DATE	DESCRIPTION	BY
1			

PROJECT
RACEWAY #1663
29'-0" X 61'-0"
(6) COLUMN EDO CANOPY
ELEVATIONS

LOCATION
500 MERIWETHER ROAD NW
MILLEDGEVILLE, GA 31061

MADISON INDUSTRIES
MADISONIND.COM

CORPORATE OFFICE
2801 W. Warren Ave.
Suite 211
Santa Ana, CA 92704
562.484.5099

CALIFORNIA
17204 Phoenix Avenue
Hesperia, CA 92345
562.484.5099

GEORGIA
1055 Industrial Blvd.
Conyers, GA 30094
770.483.4401

THESE DRAWINGS AND ALL INFORMATION HEREON ARE OF A CONFIDENTIAL NATURE AND REMAIN THE PROPERTY OF MADISON INDUSTRIES (MI). ANY USE OR REPRODUCTION OF THESE DRAWINGS FOR ANY PURPOSE, EXCEPT BY WRITTEN PERMISSION OF MADISON INDUSTRIES IS STRICTLY PROHIBITED.

GEORGIA REGISTERED No. PE036820 PROFESSIONAL ENGINEER JOHN A. BRADLEY
5/22/24

PROFESSIONAL ENGINEER

MODEL No.

SCALE

DRAWN BY	DATE
MH	5/16/24
CHECKED BY	DATE
DD	5/16/24
MI ENGINEER	DATE
JFB	5/15/24

DRWG. No.
A-2

SHEET 4 OF 5

JOB No.
WGA09902-2

FILE NAME: WGA09902-2 Permits.dwg

R4 September 2022

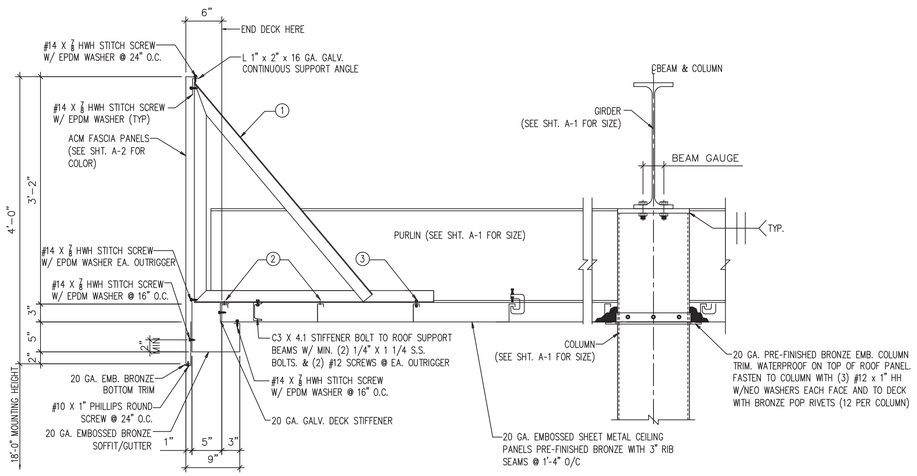

SECTION

(FROM SHEET A-1)
SCALE: 1" = 1'-0"

S1

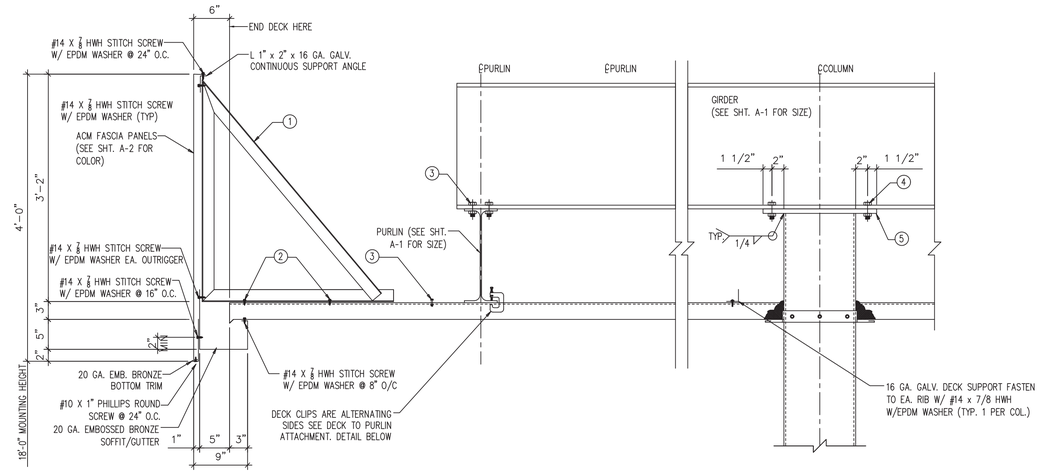

SECTION

(FROM SHEET A-1)
SCALE: 1" = 1'-0"

S2

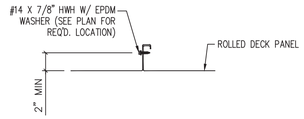

TYP. STITCH SCREW DETAIL

SCALE: NTS

DETAIL

(FROM SHEET A-1)

D1

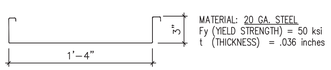

3" DECK PROFILE

SCALE: 1 1/2" = 1'-0"

DETAIL

(FROM SHEET A-1)

D2

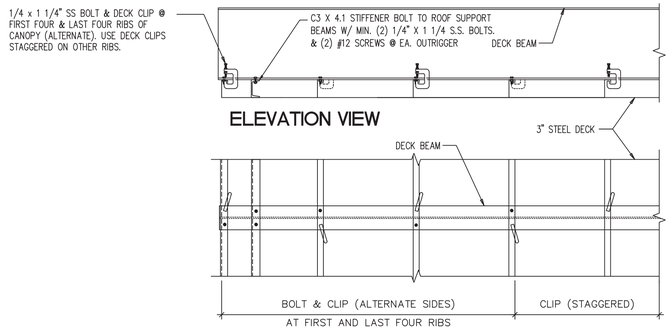

ELEVATION VIEW

DECK FASTENING DETAIL

SCALE: N.T.S.

PLAN VIEW

DETAIL

(FROM SHEET A-1)

D3

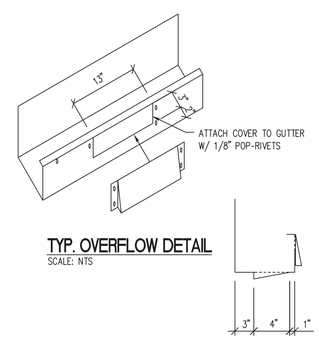

TYP. OVERFLOW DETAIL

SCALE: NTS

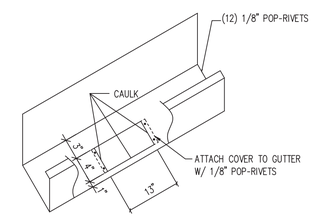

TYP. SCUPPER DETAIL

SCALE: NTS

DETAIL

(FROM SHEET A-1)

D4

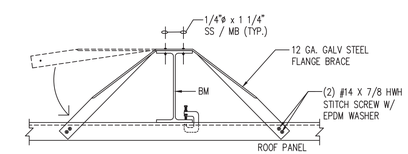

FLANGE BRACE DETAIL

SCALE: N.T.S.

DETAIL

(FROM SHEET A-1)

D5

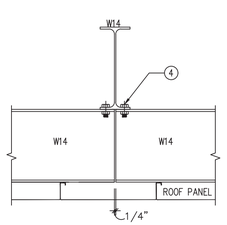

BEAM SPLICE DETAIL

SCALE: 1" = 1'-0"

DETAIL

(FROM SHEET A-1)

D6

SCHEDULE

MARK	ITEM	DESCRIPTION	QTY.
1	OUTRIGGER	L 2"x2"x16 GA. GALVANIZED SHEET METAL @ 4'-0" O.C.	44
2	OUTRIGGER FASTENER	(2) #14 X 7/8 HWH W/ EPDM WASHER PER OUTRIGGER	88
3	OUTRIGGER FASTENER	(1) 1/4"ø x 1 1/4" SS M. BOLTS PER OUTRIGGER	44
4	GIRDER TO PURLIN CONNECTION	(4) 3/4"ø x 1 3/4" A307 M. BOLTS	48
5	GIRDER TO COLUMN CONNECTION	(4) 3/4"ø x 2 1/2" A307 M. BOLTS	24
6	COLUMN CAP PLATE	PLATE 3/4" x 12" x 1'-7"	6

REV.	DATE	DESCRIPTION	BY
1			

PROJECT

RACEWAY #1663

29'-0" X 61'-0"
(6) COLUMN EDO CANOPY
SECTIONS AND DETAILS

LOCATION

500 MERIWETHER ROAD NW
MILLEDGEVILLE, GA 31061

MADISON INDUSTRIES
MADISONIND.COM

CORPORATE OFFICE
2600 Michelle Drive
Suite 211
Santa Ana, CA 92704
562.494.5099

CALIFORNIA
17201 Downey Avenue
Hesperia, CA 92345
562.494.5099

GEORGIA
1105 Lake Dr.
Conyers, GA 30094
770.483.4401

THESE DRAWINGS AND ALL INFORMATION HEREON ARE OF A CONFIDENTIAL NATURE AND REMAIN THE PROPERTY OF MADISON INDUSTRIES (MI). ANY USE OR REPRODUCTION OF THESE DRAWINGS FOR ANY PURPOSE, EXCEPT BY WRITTEN PERMISSION OF MADISON INDUSTRIES IS STRICTLY PROHIBITED.

GEORGIA REGISTERED No. PE036820 PROFESSIONAL ENGINEER JOHN R. BRADLEY
5/22/24

PROFESSIONAL ENGINEER

MODEL No.

SCALE

DRAWN BY	DATE
MH	5/16/24
CHECKED BY	DATE
DD	5/16/24
MI ENGINEER	DATE
JFB	5/15/24

DRWG. No.
A-3

SHEET 5 OF 5

JOB No.
WGA09902-2

FILE: R:\ME\WGA09902-2 Permits.dwg